OPERATOR'S AND PARTS MANUAL

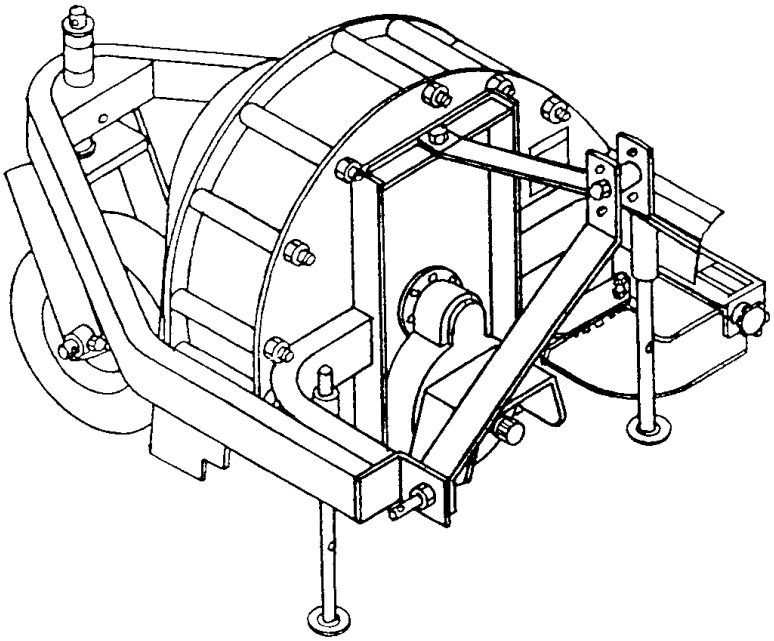

Three Point Hitch Debris Blower
Model 9424B
Category "B"

SERIAL NO. 2008834 AND UP

OM 0185-A
04/03

ISO 9001 ITS Warnock Hersey CERTIFICATION

RAD

TABLE OF CONTENT

INTRODUCTION – To the Purchaser 3

SAFETY PRECAUTIONS 4

Before Operation 4

Notice 5

The Debris Blower 5

Before Operation 5

Debris Blower Operation 6

The Tractor 7

General Information 7

Operating the Tractor 7

Maintenance 8

Transporting 8

Storage 8

DECALS 9

ASSEMBLY 10

Attaching Debris Blower 10

Manual Nozzle Rotation – 9484 (Option) 11

Hydraulic Nozzle Rotation – 8044 (Option) 12

Electric Deflector – 9370 (Option) 14

Electric Nozzle Nozzle Rotation – 9480 (Option) 15

OPERATION 16

Operating Controls 16

Manual Nozzle Rotation 16

Engaging & Disengaging Blower 16

Optional Hydraulic Nozzle Rotation 16

Optional Electric Nozzle Rotation 16

Adjustments 16

Nozzle Deflector 16

Front Gauge Wheel 16

Air Flow Adjuster 17

TABLE OF CONTENT

MAINTENANCE 18
Tire Pressure 18
Hydraulic Lines 18
Lubrication 18
Dismounting 18
PARTS 19
Introduction 19
Three Point Hitch Debris Blower 20
Electric Nozzle Rotation – 9480 (Option) 23
Hydraulic Nozzle Rotation Kit – 8044 (Option) 24
Electric Deflector Rotation – 9370 (Option) 25
Manual Nozzle Rotation System – 9484 (Option) 26
Gearbox (664533) 27
Driveline (661169) 28
Driveline Length Adjustment Instructions 29
WARRANTY 30
TORQUE SPECIFICATION TABLE 31

INTRODUCTION

TO THE PURCHASER

All products are designed to give safe, dependable service if they are operated and maintained according to instructions. **Read and understand this manual before operation.**

This manual has been prepared to assist the owner and operators in the safe operation and suitable maintenance of the equipment. The information was applicable to products at the time of manufacture and does not include modifications made afterwards.

Read and understand this operator's manual before attempting to put equipment into service. Familiarize yourself with the operating instructions and all the safety recommendations contained in this manual and those labelled on the equipments and on the tractor. Follow the safety recommendations and make sure that those with whom you work follow them.

Illustrations

The illustrations may not necessarily reproduce the full detail and the exact shape of the parts or depict the actual models, but are intended for reference only.

Direction Reference

All reference to right and left, forward or rearward, are from the operator's seat, facing the steering wheel.

To assist your dealer in handling your needs, please record hereafter the model number and serial number of your equipment and tractor. It is also advisable to supply them to your insurance company. It will be helpful in the event that an equipment or tractor is lost or stolen.

	TRACTOR	**IMPLEMENT**
MODEL :		
SERIAL NUMBER :		
DATE OF PURCHASE :		
DEALER NAME:		

SAFETY PRECAUTIONS

SAFETY FIRST

This symbol, the industry's "Safety Alert Symbol", is used throughout this manual and on labels on the machine itself to warn of the possibility of personal injury. Read these instructions carefully. It is essential that you read the instructions and safety regulations before you attempt to assemble or use this unit.

DANGER : Indicates an immediately hazardous situation which, if not avoided, will result in death or serious injury.

WARNING : Indicates a potentially hazardous situation which, if not avoided, could result in death or serious injury.

CAUTION : Indicates a potentially hazardous situation which, if not avoided, may result in minor or moderate injury.

IMPORTANT : Indicates that equipment or property damage could result if instructions are not followed.

NOTE : Gives helpful information.

All products are designed to give safe, dependable service if they are operated and maintained according to instructions. **Read and understand this manual before operation**. It is the owner's responsibility to be certain anyone operating this product reads this manual, and all other applicable manuals, to become familiar with this equipment and all safety precautions. Failure to do so could result in serious personal injury or equipment damage. If you have any questions, consult your dealer.

BEFORE OPERATION

Children

Tragic accidents can occur if the operator is not alert to the presence of children. Children are generally attracted to machines and the work being done. Never assume children will remain where you last saw them.

1. Keep children out of the operating area and under the watchful eye of another responsible adult.
2. Be alert and turn machine off if children enter the work area.
3. Before and when backing, look behind for small children.
4. Never carry children while operating the machine. They may fall off and be seriously injured or interfere with the safe operation of the machine.
5. Never allow children to play on the machine or attachment even when they are turned off.
6. Never allow children to operate the machine even under adult supervision.
7. Use extra care when approaching blind corners, shrubs, trees, or other obstructions that might hide children from sight.

SAFETY PRECAUTIONS

NOTICE

A safe operator is the best assurance against accidents. All operators, no matter how experienced they may be, should read this operator's manual and all other related manuals before attempting to operate an equipment. Please read the following section and pay particular attention to all safety recommendations contained in this manual and those labelled on the equipments and on the tractor.

THE DEBRIS BLOWER

Before Operation

1. Read and understand this operator's manual and tractor operator's manual. Know how to operate all controls and how to stop the unit and disengage the controls quickly.
2. Never wear loose, torn, or bulky clothing around the tractor and debris blower. It may catch on moving parts or controls, leading to the risk of accident.
3. Clear the area of people, animals and large debris before commencing operation.
4. Make sure the drive system is disengaged into neutral before starting the engine.
5. Keep all shields in place and all mounting hardware properly tightened.
6. Periodically, inspect all moving parts for wear and replace with genuine parts if an excessive amount of wear is present.
7. Never attempt to make any adjustments while engine is running. Read this manual carefully to acquaint yourself with the equipment as well as the tractor operator's manual. Working with unfamiliar equipment can lead to accidents. Be thoroughly familiar with the controls and proper use of the equipment.
8. Do not modify or alter this equipment or any of its components, or any equipment function without first consulting your dealer.
9. Replace all missing, illegible, or damaged safety and warning decals. See list of decals in the operator's manual.
10. Keep safety decals clean of dirt and grime.

Debris Blower Operation

1. Never allow anyone to operate the equipment until they are thoroughly familiar with basic tractor and debris blower operation.
2. Never operate the debris blower without good visibility and lighting.
3. Always make sure all debris blower components are properly installed and securely fastened BEFORE operating.
4. Do not make mechanical adjustments while the unit is in motion, the debris blower is raised, or the engine is running.
5. Do not put hands or feet near rotating parts. Keep clear of air blast nozzle opening at all time. Do not enter hands or feet into air blast nozzle opening.
6. Never allow anyone to sit, stand or ride on the debris blower at any time.
7. Always keep the equipment air blast directed away from people, animals and objects that could be struck by debris. Keep a careful watch for small debris that could enter the blower while operating.
8. Never clean or adjust PTO-driven equipment with the tractor engine running,
9. Never operate the equipment without guards, shields and other safety protective devices in place.
10. Before leaving the tractor unattended, take all necessary precautions. Disengage the PTO, shift into neutral, set the parking brake, stop the engine and remove the ignition key.
11. Exercise extreme caution when operating on or crossing a gravel drive, walks, or roads. Stay alert for hidden hazards or traffic. Do not carry passengers.
12. Do not run the engine indoors except when starting engine and transporting attachment in or out of building. Carbon monoxide gas is colorless, odorless and deadly.
13. If the debris blower should start to vibrate abnormally, stop the engine immediately and check for the cause. Vibration is generally a warning of trouble.
14. Exercise extreme caution when changing direction on slopes. Do not attempt to operate on steep slopes or near embankments.
15. Never operate machine at high transport speeds on a slippery surface.
16. Use extra caution when backing up.
17. Prolonged exposure to loud noise can cause impairment or loss of hearing. Wear a suitable hearing protective device such as earmuffs or earplugs to protect against objectionable or uncomfortable noises.
18. Always wear eye protection during operation (face shield, etc.)
19. Make sure the tractor is counterweighted as recommended by your dealer. Weights provide the necessary balance to prevent tip-over or loss of traction or steering.

THE TRACTOR

General Information

1. Read the operator's manual carefully before using tractor. Lack of operating knowledge can lead to accidents.
2. Do not permit anyone but the operator to ride on the tractor. There is no safe place for extra riders.

Operating the Tractor

1. Never allow anyone to operate the debris blower until they are thoroughly familiar with basic tractor and debris blower operation.
2. Do not allow anyone to ride on the tractor/equipment at any time. There is no safe place for passengers on this equipment. The operator MUST sit in the tractor seat.
3. Never allow anyone in front of unit.
4. Always make sure all components are properly installed and securely fastened BEFORE operation.
5. Make sure the driveline guard is installed when using PTO-driven equipment and always replace the guard if damaged.
6. Never start the engine while standing beside the tractor. Always sit on the tractor operator's seat while starting the engine or operating controls.
7. Set the parking brake, wait for all movement to stop, lower the equipment to the ground, shut off the engine and remove the key BEFORE leaving the operator’s seat. The operator must never get off the tractor while it is motion.
8. Never run the tractor engine in a closed building without adequate ventilation, as the exhaust fumes are very dangerous.
9. Never allow an open flame near the fuel tank or battery.
10. Handle fuel with care, as it is highly flammable.
11. Use approved fuel container.
12. Never add fuel to a running engine or a hot engine.
13. Fill fuel tank outdoors with extreme care. Never fill fuel tank indoors. Replace fuel cap securely and wipe up spilled fuel.
14. Never park the tractor on a steep slope.
15. Exercise extreme caution when changing direction on slopes. Do not attempt to clear steep slopes.
16. Use care when operating on steep grades to maintain proper stability.
17. Keep the tractor in gear when going downhill.
18. Always drive the tractor at speeds compatible with safety, especially when operating over rough ground, crossing ditches, or when turning.
19. Make sure the tractor is counterweighted as recommended by your dealer. Weights provide the necessary balance to prevent tip-over or loss of traction or steering.
20. Eye and hearing protection is recommended when operating the equipment.
21. Operate only during daylight hours, or when the area is well lit with bright artificial light.
22. Inspect the equipment after striking any foreign object to assure that all equipment parts are safe and secure and not damaged.

MAINTENANCE

ALWAYS USE GENUINE PARTS WHEN REPLACEMENT PARTS ARE REQUIRED

1. Park the tractor/equipment on level ground, set the parking brake, lower the equipment to the ground, shut off the engine and remove the key BEFORE making any equipment adjustments.
2. Provide adequate blocking before working under the debris blower when in raised position.
3. Never park the tractor with fuel in the fuel tank inside a building where an open flame or sparks are present. Allow the engine to cool down before leaving it in any enclosure.
4. Keep the tractor/equipment clean. Environmental build-up can lead to malfunction or serious personal injury.
5. Always wear eye protection when cleaning or servicing the equipment.
6. Do not modify or alter this equipment or any of its components or operating functions. If you have questions concerning modifications, consult your dealer.

TRANSPORTING

1. If the tractor/equipment is to be driven on public roads, it must be equipped with an SMV (Slow Moving Vehicle) sign. Check local traffic codes that may apply to unit usage on public roads and highways in your area.
2. Be alert for all other traffic when driving the tractor/equipment on public roads or highways.
3. Disengage power to equipment when transporting or when not in use.

STORAGE

1. Before storing the debris blower certain precautions should be taken to protect it from deterioration:
2. Clean the debris blower thoroughly.
3. Make all the necessary repairs.
4. Replace all Safety Signs that are damaged, lost, or otherwise become illegible. If a part to be replaced has a sign on it, obtain a new safety sign from your dealer and install it in the same place as on the removed part.
5. Repaint all parts from which paint has worn or peeled.
6. When the debris blower is dry, oil all moving parts. Apply oil liberally to all surfaces to protect against rust.

CAUTION: Do not allow oil or grease on the drive belt and pulleys.

DECALS

Replace Immediately if Damaged

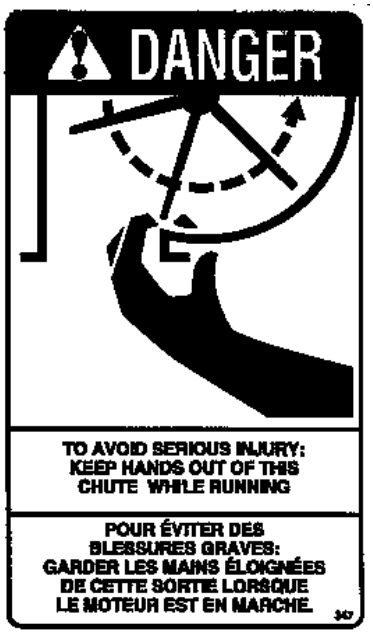

665132

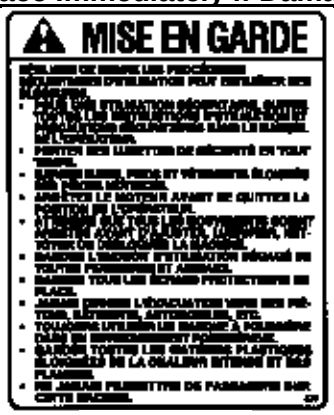

660989

660988

661249

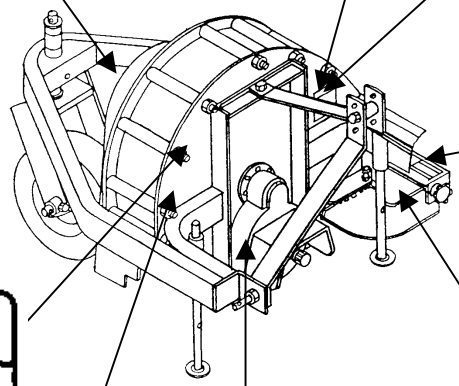

662647

661571

661570

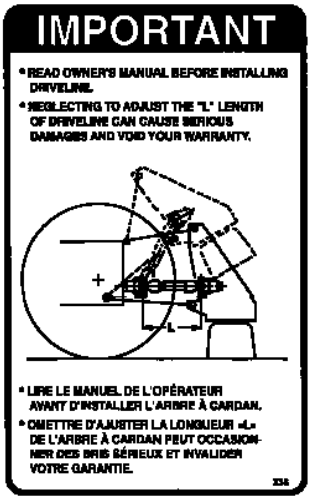

664812

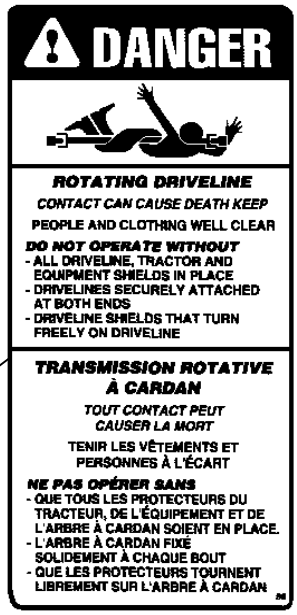

656781

662712

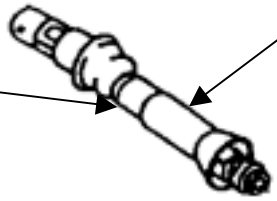

ATTACHING DEBRIS BLOWER

a) Insert nozzle rotation handle (fig.1, item 1) through handle support (fig.1, item 2) on attaching frame, and inside rotation tube (fig.1, item 3). Lock in place with a 10-24 x 1” allen capscrew and a nylon lock nut. Do not tighten.

b) Attach tractor upper and lower links to blower attaching frame (fig.2, item 1). Adjust anti-sway blocks and upper link so that the main frame is level.

c) Raise blower approximately 1" off the ground.

d) Turn engine off, set parking brake, remove ignition key.

e) Set parking stands (fig.2, item 2) in raised position by placing hair pin on upper side of stand support.

f) Check full lifting range of the blower to make sure driveline is not too long. If the driveline is too long it must be cut equal on both portion (see instruction sheet at the end of manual). It is important to keep in mind that in all operating positions the two driveline portions must overlap at least 3" (76.2mm).

WARNING: NEGLECTING TO ADJUST THE "L" LENGTH OF DRIVELINE CAN CAUSE SERIOUS DAMAGES AND VOID YOUR WARRANTY.

g) Connect driveline to tractor PTO shaft.

WARNING: This shaft turns at very high RPM. If the collar is not locked to shaft in gearbox, or if the yoke at the tractor end is not secured properly, the driveline can fly loose with great force capable of causing serious injury or death.

h) Adjust rotation handle length so that it is convenient to the operator when the blower is fully raised.

i) Check and adjust all adjustment settings and maintenance .

Figure 1

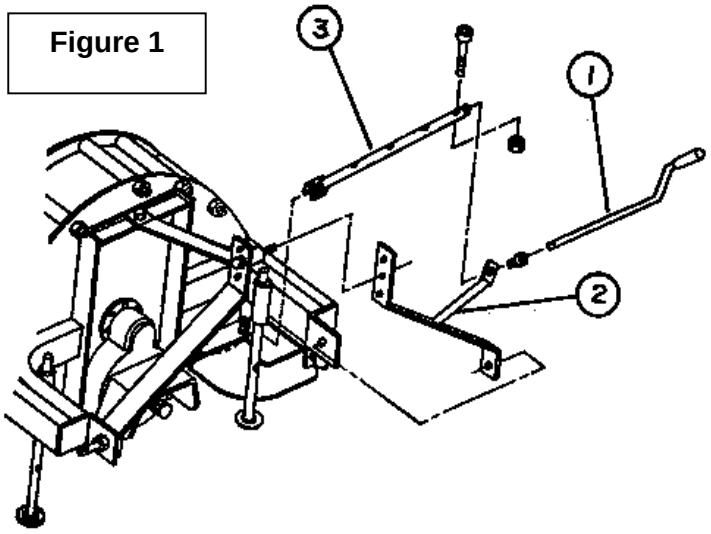

Figure 2

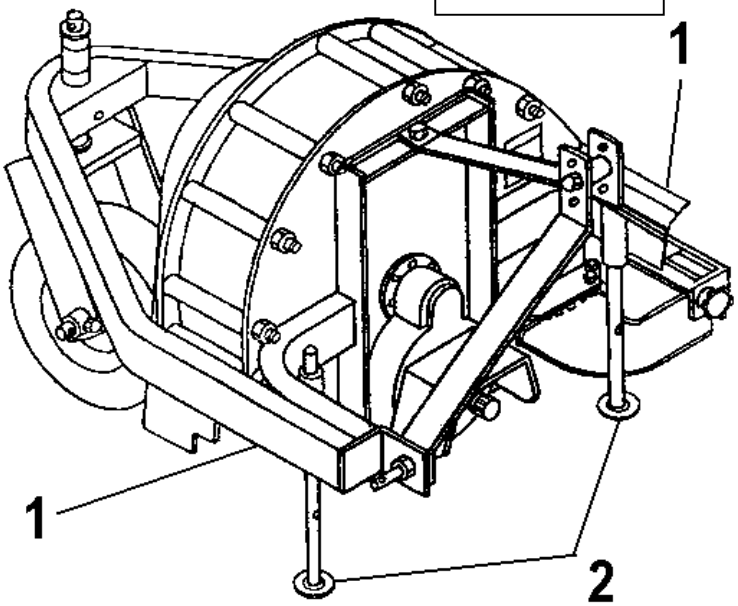

Manual Nozzle Rotation – 9484 (Option)

1. Insert the 1 11/16"lg. plastic bushing (item 3) in the rotation bracket (item 6). Grease the two ends of the rotation worm (item 2) and insert the rotation worm in the bushing (item 3).

2. Insert the 1 5/16" plastic bushing (item 1) in the tube welded behind blower (item 10)

3. Install the assembly by placing the rotation bracket (item 6) under the nozzle plate of the debris blower.

4. Install the handle support (item 14) on the 3 point left attaching plate using two 5/16"NC x 1" bolts, lockwashers and nuts (items 15-7-8). Tighten securely.

5. Insert assembled rotation tube (item 9) inside the rotation worm. Align holes and insert a 10-24 x 1" allen setscrew (item 4) making sure the setscrew sinks in the worm. Secure with a nylon insert locknut (item 5).

6. Install the plastic grommet (item 11) in the handle support (item 14).

7. Insert the handle (item 12) inside the grommet and inside the rotation tube (item 9). Select desired length, align nearest holes and secure with an allen setscrew (item 4) and nylon insert locknut (item 5).

8. Adjust handle position and height to a comfortable and safe operating position after the debris blower has been mounted to the tractor.

CAUTION: To avoid personal injury, check the full lifting range of the debris blower, to ensure that the nozzle rotation handle is clear of the operator's area when the blower is in raised position.

9. Install plastic handle (item 13) over rotation handle (item 12).

10. Tighten all bolts according to the Torque Specification Table at the end of the manual.

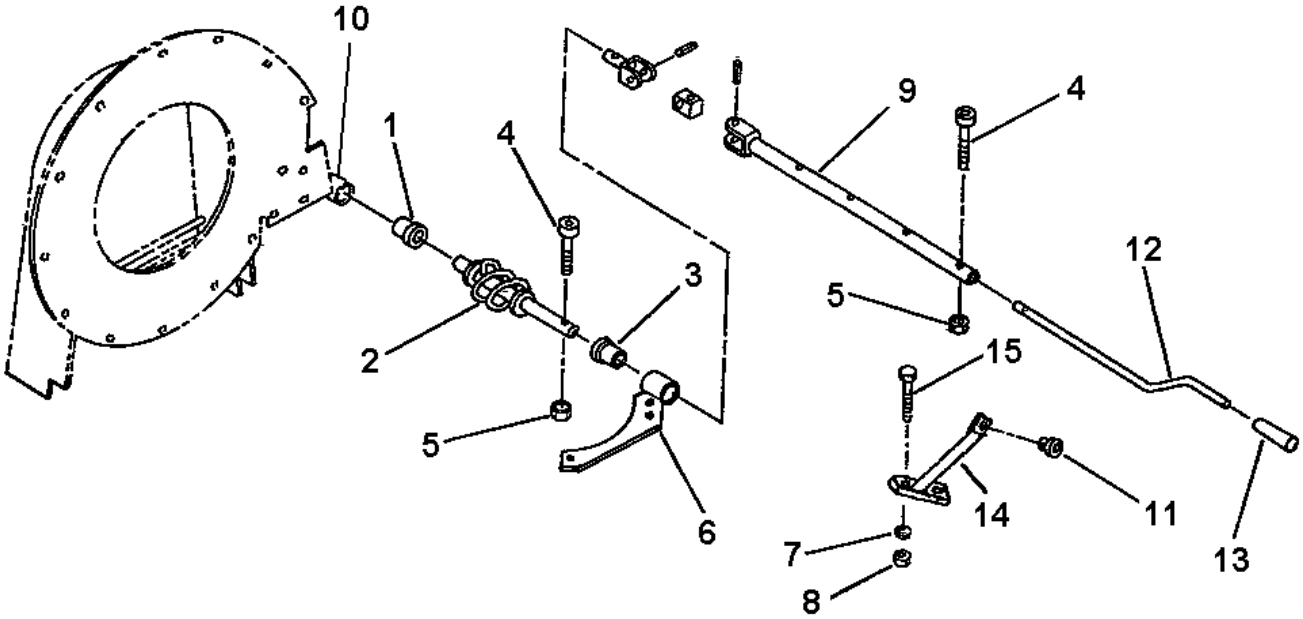

Hydraulic Nozzle Rotation – 8044 (Option) ***(Figures 3-4)***

General Preparation:

1. Remove the air blast nozzle (fig.4, item 1) from the debris blower. Discard bolts and nuts.
2. Remove the deflector (fig.4, item 2) from the air blast nozzle. Keep bolts and nuts on hands.
3. Using the paper drilling pattern, drill two 9/32" dia holes on the side of the air blast nozzle where there is no round hole.
4. On the air blast nozzle side of the debris blower, remove the two 3/8" NC x 6 1/2" hex bolts (fig.3, items 2-3) and two 3/8" NC flange nuts (fig.3, item 4) located above and below the tubing (fig.3, item 1). Keep these bolts and nuts on hands.

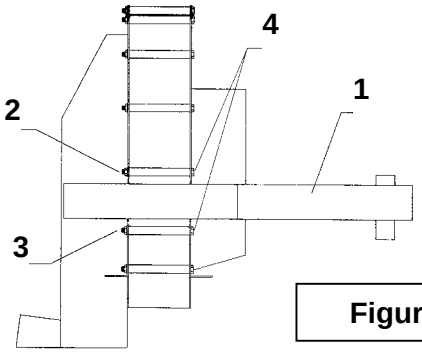

Figure 3

Air Blast Nozzle Assembly ***(Figure 4)***

1. Secure the #40 roller chain assembly (item 4) to the rotating ring (item 5) with 1/4" NC x 1" hex bolts (item 6), 5/16" flatwashers (item 7) and 1/4" NC. stover nut (item 8). Tighten securely.
2. Secure the rotating ring to the air blast nozzle with 1/4" NC x 5/8" hex. bolt (item 9), and 1/4" NC flange nut (item 10). Tighten securely.
3. Secure the deflector to the air blast nozzle with bolts and nuts already kept on hands. Tighten securely.
4. Secure the air blast nozzle assembly (with the nylon ring) to the debris blower. Place the air blast nozzle assembly under the air outlet. Place the 4 rotation spacers (item 12) under the air outlet. Place both retaining plates (item 13) under the rotation spacers. Place the rotation bracket (item 14) under the retaining plates. Secure with 1/4" NC x 1 1/4" hex bolts (item 15), 1/4" NC x 1" hex bolts (item 16) , 1/4" lockwashers (item 17) and 1/4" NC hex nuts (item 18). Tighten loosely.

Rotation Bracket Assembly:

1. Insert a 7/16" flatwasher on each bolt kept on hand and attach the rotation bracket to the debris blower using these bolts and nuts kept on hands. The rotation bracket should go over the intake cover (fig.4, item 3), with the slot covering the tubing (fig.3, item 1).
2. Tighten securely all the bolts and nuts

Hydraulic Motor Assembly

(Figure 4)

1. Tighten securely restrictors (item 20) to hydraulic motor (item 21). Using thread sealant, tighten securely connectors and 1/4" x 28" hoses (item 22).
2. Insert the 1/8" x 1/8" x 1" keysteel (item 23) in the keyway of the hydraulic motor.
3. Slide the sprocket (item 24) over the shaft of the hydraulic motor. Tighten loosely the 1/4" NC x 1/4" allen socket setscrews (item 25) of the sprocket.
4. Place the hydraulic motor assembly on the fixation plate (item 28) and secure with the three M6 x 1.0 x 10mm allen flathead setscrews (item 29). Then, place the hydraulic motor over the rotation bracket (item 14), passing the sprocket (item 24) through the oblong hole. Mesh the sprocket in the #40 roller chain assembly. Secure the hydraulic motor assembly in place with two 3/8" NC x 1" hex bolts (item 26), two 7/16" flatwashers (item 19), two 3/8" lockwashers (item 27) and two 3/8" NC hex nuts (item 11). Tighten securely.
5. Place the sprocket so that the #40 roller chain assembly are leveled together. Tighten securely the 1/4" NC x 1/4" allen socket setscrews (item 25) of the sprocket.

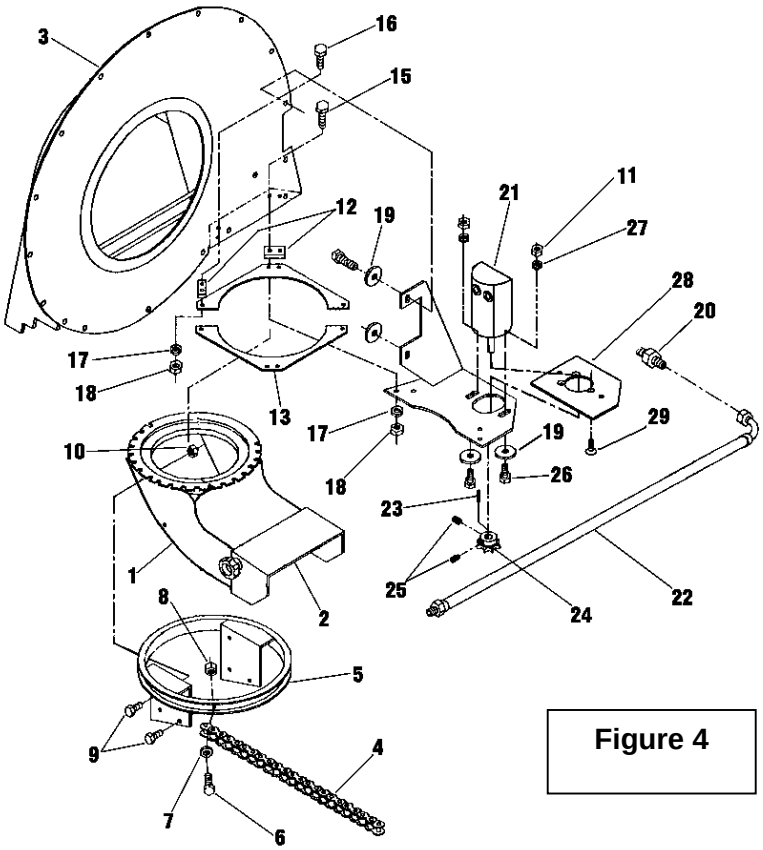

Figure 4

Lubrication:

Lubricate the #40 roller chain with a good quality chain lubricant once every 16 hours of operation.

ELECTRIC DEFLECTOR – 9370 (OPTION) FOR DEBRIS BLOWER

(Figure 5)

a) Remove the plastic knob from deflector and replace existing bolt by a 5/16” x 3/4” carriage bolt (item 7). Secure with the original nylon washer and supplied nylon nut (item 8). Leave 1/16” play.

b) Install the actuator support plate (item 1) on right hand side of nozzle (item 2) using two 1/4” x 3/4" bolts (item 3) and 1/4" NC flange nuts. Torque to 13 ft. lbs.

c) Attach actuator base to support plate, using a 1/4 x 1 1/2 (10-24 NC) shoulder screw (item 4), spacer (item 5), flatwasher and a 10-24 NC nylon hex. nut. Tighten to allow free movement.

d) Insert stopper sleeve (item 6) on actuator rod. Attach actuator rod end to deflector using the 1/4 x 2 1/4 bolt, spacer, flatwasher and 10-24 NC nylon hex. nut. Tighten to allow free movement.

e) Drill a 1/2” hole in tractor for control switch. Drili a .593” hole at least 2 1/2” from control switch hole for fuse holder. The two holes must be drilled in an appropriate location and must not interfere with existing controls or electrical system.

NOTE: Refer to figure 6 for electrical diagram.

f) Solder one 18” wire to fuse holder side terminal and the other 18” wire with eyelet to the bottom terminal.

g) Install control switch and fuse holder. Thread rubber protector over switch.

h) Connect eyelet of 18” wire to **"b"** terminal of control switch.

i) Connect one end of the 17” wire to **"e"** terminal on control switch and other end to a suitable ground on tractor frame.

j) Connect one end of the 5” wire to a terminal and other end to **"d"** terminal on control switch.

k) Connect one end of other 5” wire to **"c"** terminal and other end to **"f"** terminal on control switch.

l) Attach eyelet end of the 102” double wire to **"a"** and **"f"** terminals on control switch.

m) Connect fused wire to wire from tractor ignition switch **"AC"** terminal using connector tap.

n) Connect free end of the double wire to the electric motor. Cut this wire at a convenient location for blower removal. Install the wire connectors with one male and one female connector to the motor half of the wire.

o) Secure wires away from moving parts using the provided tie wraps and adhesive clips.

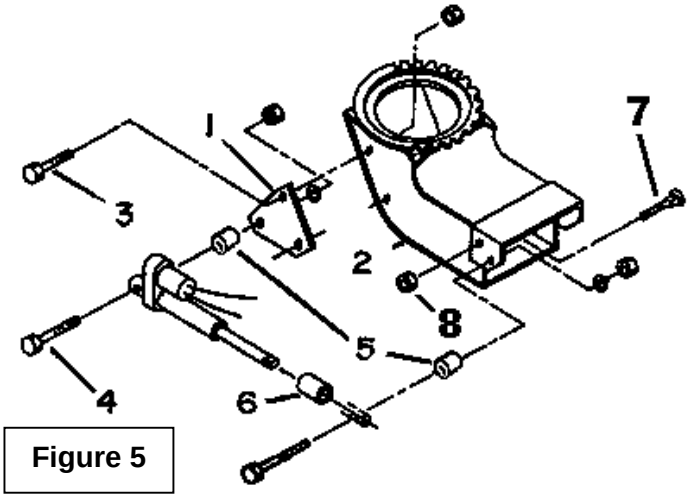

Figure 5

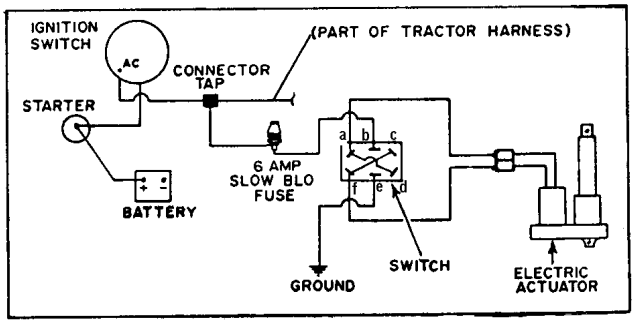

Figure 6

ELECTRIC NOZZLE ROTATION – 9480
(Option) (Figure 7)

a) Remove rotation support from nozzle base lip, and remove rotation worm with joint and handle.

b) Install the adapter (item 1) on the motor shaft and attach motor (item 2) to rotation bracket (item 3) using three 1/4" x 3/4" bolts, lockwashers and flatwashers. Tighten.

c) Insert longest tube end of rotation worm (item 4) over adaptor and into plastic bushing in rotation bracket. Align holes and secure with a 10-24 x 1" capscrew and a nylon lock nut. Tighten securely.

d) Install the assembly over the nozzle base and place the retaining plate (item 5) on underside of nozzle base. Secure using two 1/4" x 3/4" bolts, lockwashers and nuts. Torque to 9-11 lbs.ft.

e) Drill one 1/2" hole in tractor for control switch. Drill one .593" hole at least 2 1/2" from control switch hole for fuse holder. The two holes must be drilled in an appropriate location and must not interfere with existing controls or electrical systems.

f) Solder one 18" wire to the side terminal of fuse holder and the other 18" wire to the bottom terminal (see figure 8).

g) Install control switch and fuse hokler in holes drilled in **(e)** above, and thread rubber toggle protector over switch.

h) Connect one wire from fuse holder to middle terminal of control switch, the other 18" wire to the tractor ignition switch (see figure 8).

i) Connect one end of the long lead wire to the electric motor and the other end to the control switch. Cut this wire at a convenient location for blower removal. Install the wire connectors with one male and one female connector to the motor half of the wire. This will allow the blower to be easily dismounted.

j) Secure wires away from moving parts using the provided tie wraps and adhesive clips.

NOTE: If chute rotates opposite to direction of control switch, simply reverse motor lead wires.

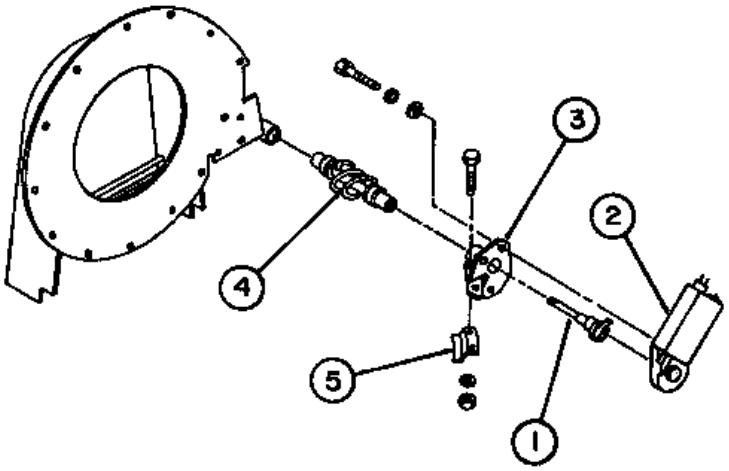

Figure 7

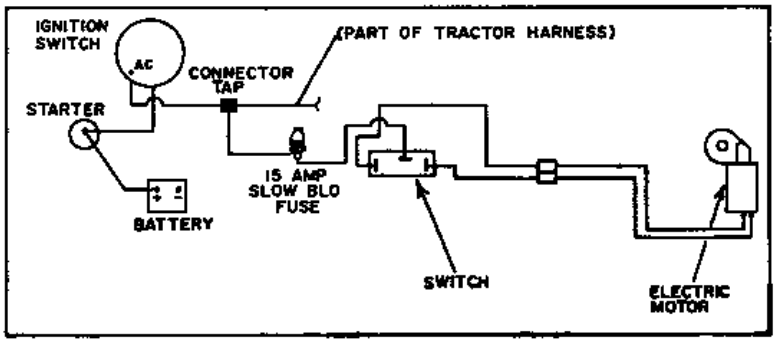

Figure 8

OPERATING CONTROLS

Manual Nozzle Rotation

The nozzle (fig.9, item 1) can be rotated 230°. Set direction of the nozzle by turning the handle clockwise to rotate nozzle toward tractor or counterclockwise to rotate nozzle away from tractor.

Engaging & Disengaging Blower

Refer to tractor operator's manual for proper instructions on PTO operation and adjustments.

Optional Hydraulic Nozzle Rotation

Use the auxiliary valve handle: when pushed forward the nozzle rotates in a counterclockwise direction to the left, and when pulled back the nozzle rotates to the right in a clockwise direction.

Optional Electric Nozzle Rotation

Placing the toggle forward, rotates the nozzle toward the tractor. Placing the toggle backward, rotates the nozzle away from the tractor. If movements are different simply reverse motor lead wires.

Optional Electric Nozzle Deflector

Placing the toggle forward, lowers the deflector (fig.9, item 2). Placing the toggle to the rear raises the deflector. (If movements are different simply reverse actuator lead wires).

ADJUSTMENTS

WARNING: Before making any adjustment, turn engine off, set parking brake, remove ignition key and wait for all movements to stop.

Nozzle Deflector

To adjust the deflector (fig.9, item 2), loosen knob, select angle and fasten knob securely.

Front Gauge Wheel

Set gauge wheel (fig.9, item 3) height according to surface conditions (make sure nozzle clears the ground in all conditions). To set height, remove linch pin from wheel bracket, place the sleeve spacers either on upper or lower side of blower frame, and reinstall the linch pin.

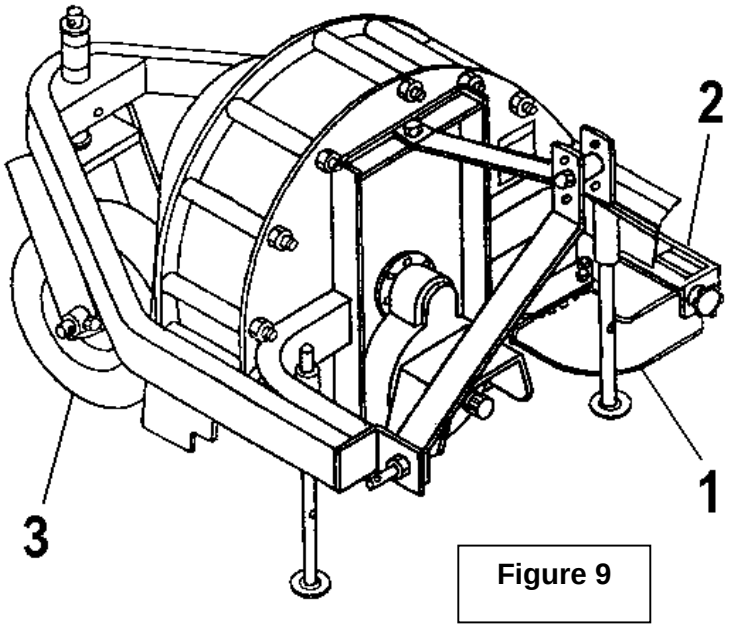

Figure 9

Air Flow Adjuster ***(Figure 10)***

The debris blower is equipped with an air flow adjuster which controls the amount of air entry. This device is located on the front of the unit, and it was designed to protect the tractor's motor. It is recommended that the tractor's motor revolution does not go lower than 600 R.P.M. when the debris blower is in operation. If the tractor's motor goes under 600 R.P.M., you must move the air flow adjuster closer to the cone (see figure 4) to reduce the amount of air entry.

Remove the round wire lock pin, push the adjuster in the preceding adjustment hole and reinstall the round wire lock pin. There are three adjustment holes.

NOTE: The closer the adjuster is from the cone, the less the tractor's motor is solicited thus, the air flow is reduced

Figure 10

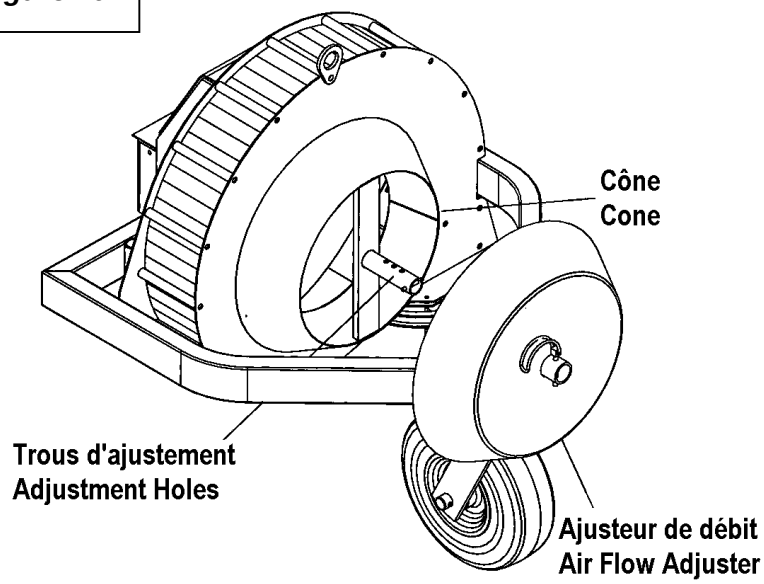

Tire Pressure

Inflate to 20 psi and check daily.

Hydraulic Lines (If equipped)

Check hoses for leaks using cardboard every 100 hours of operation or monthly.

LUBRICATION

Air Blast Nozzle

Oil base every 24 hours of operation.

Front Wheel

Grease the fitting every 8 hours of operation.

Gearbox

Check oil level by side plug (fig.11, item 1) every 40 hours of operation or monthly. Make sure oil is up to the level plug, if not add SAE 90 oil. Replace oil every 100 hours of operation or yearly.

Driveline

Grease each u-joint fitting every 8 hours of operation. Slide drive shaft apart and coat sliding surfaces with grease every 24 hours of operation.

DISMOUNTING

- Raise blower approximately 2" from ground. Stop engine, set parking brake and remove ignition key.
- Carefully set parking stands in most extended position by placing hairpins on underside stand supports.
- Set blower in float position and relieve hydraulic pressure.
- Disconnect driveline from tractor PTO shaft and option(s) wires & hoses (if equipped).
- Disconnect tractor upper and lower hitch arms from blower. Move tractor away from attachment.

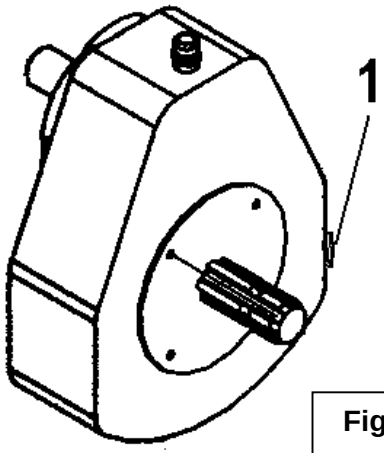

Figure 11

PARTS

INTRODUCTION

All parts are illustrated in "exploded views" which show the individual parts in their normal relationship to each other. Reference numbers are used in the illustrations. These numbers correspond to those in the "Reference Number" (REF) column, and are followed by the description and quantity required.

O/L - "Obtain Locally" in the part number column indicates common hardware that is available at your local hardware supply.

All reference to right and left, forward or rearward, are from the operator's seat, looking at the machine while operating.

Orders must give the complete description, correct part number, the total amount required, the serial number, the method of shipment and the shipping address.

The manufacturer reserves the rights to change, modify, or eliminate from time to time, for technical or other reasons, certain or all data, specifications, or the product or products themselves, without any liability or obligation.

THREE POINT HITCH DEBRIS BLOWER

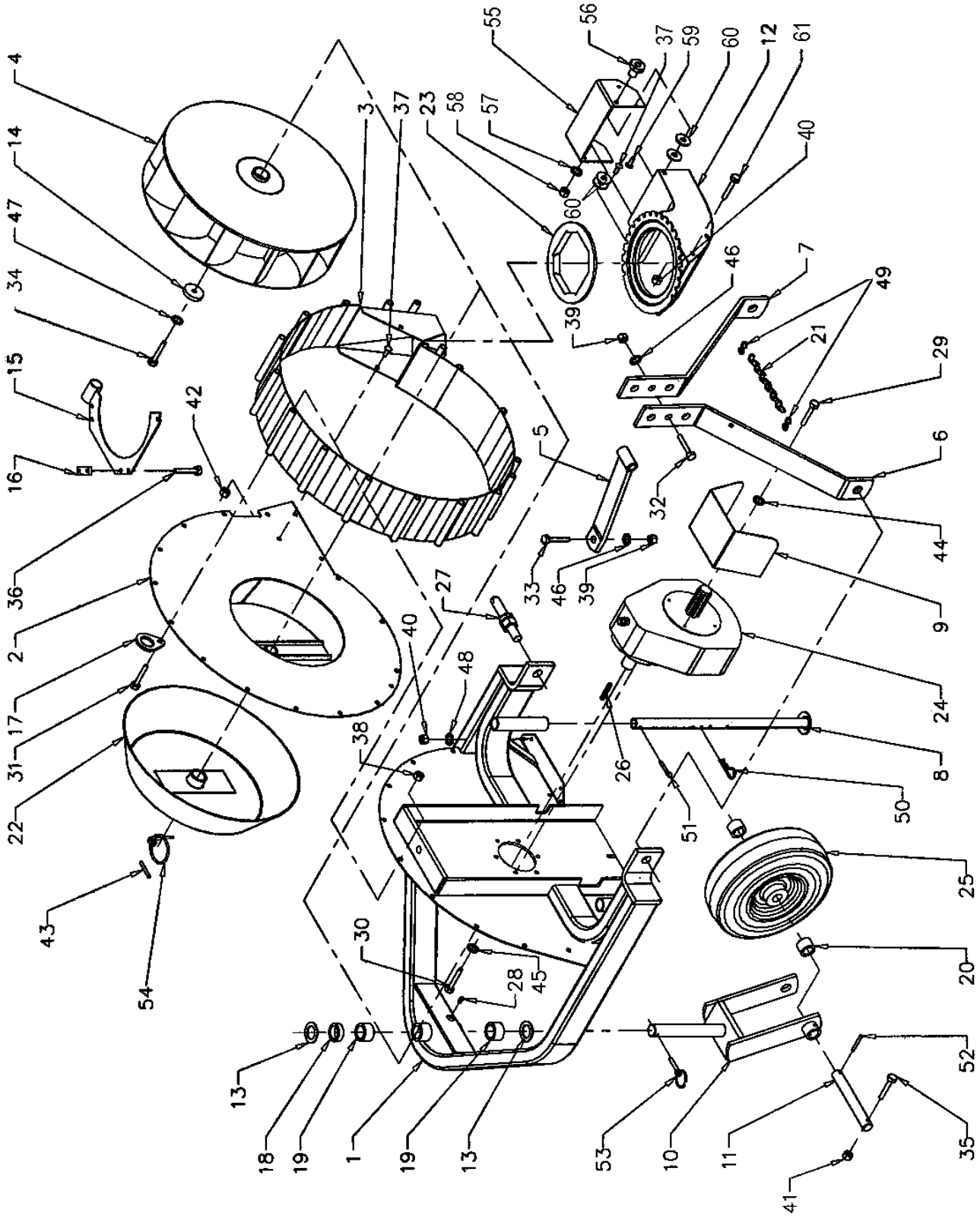

THREE POINT HITCH DEBRIS BLOWER

REF.	DESCRIPTION	QTY.	PART #
1	Housing	1	661105
2	Intake cover	1	665393
3	Impeller housing	1	661112
4	Impeller	1	661111
5	Upper hitch	1	661109
6	Hitch arm –left	1	661123
7	Hitch arm –right	1	661720
8	Parking stand	2	661121
9	Driveline guard	1	661120
10	Wheel bracket	1	661127
11	Wheel pin	1	660484
12	Air blast nozzle	1	661098
13	Wheel flatwasher	2	660486
14	Fan flatwasher	1	661204
15	Retaining plate	1	661496
16	Spacer	4	661498
17	Hoisting plate	1	662604
18	Sleeve spacer 1/2"	1	661117
19	Sleeve spacer 1"	2	661118
20	Shim	2	661119
21	Chain 8 1/2"	1	661222
22	Air flow adjuster	1	665209
23	Anti-friction ring	1	657338
24	Gearbox	1	664533
25	Wheel and tire ass'y	1	660658
26	Key 5/16" x 5/16" x 1 3/4"	1	661166
27	Hitch pin	2	654196
28	Grease fitting 1/4"NF	1	654106
29	Hex. Bolt M10 x 1.50 x 15mm	2	O/L
30	Hex. Bolt M8 x 1.25 x 20mm	6	O/L
31	Hex. Bolt 3/8" NC x 6 1/2"	17	O/L
32	Hex. Bolt 5/8" NC x 3 3/4"	1	O/L
33	Hex. Bolt 5/8" NC x 1 3/4"	1	O/L
34	Hex. Bolt 3/8" NC x 1 1/2"	1	O/L
35	Hex. Bolt 1/4" NC x 2"	1	O/L
36	Hex. Bolt 1/4" NC x 1"	8	O/L
37	Carriage bolt 5/16" NC x 3/4"	3	O/L
38	Flange nut 3/8" NC	17	O/L
39	Hex. Nut 5/8"NC	2	O/L
40	Hex. Nut 1/4" NC	12	O/L
41	Nylon hex. nut 1/4" NC	1	O/L
42	Flange nut 5/16" NC	2	O/L
43	Spring pin 1/4" x 1 7/8"	1	O/L

THREE POINT HITCH DEBRIS BLOWER

REF.	DESCRIPTION	QTY.	PART #
44	Lockwasher 10mm	2	O/L
45	Lockwasher 8mm	6	O/L
46	Lockwasher 5/8"	2	O/L
47	Lockwasher 3/8"	1	O/L
48	Lockwasher 1/4"	8	O/L
49	"S" hook .140 x 1 1/2"	2	O/L
50	Hairpin 5mm x 100mm	2	O/L
51	Cotter pin 5/32" x 1 1/2"	2	O/L
52	Spring pin 1/4" x 1 1/2"	1	O/L
53	Linchpin 5/16"	1	O/L
54	Round wire lock pin 5/16" x 2 5/8"	1	659095
55	Deflector	1	661100
56	Knob 5/16" NC	1	657309
57	Nylon flatwasher 11/32"	1	658467
58	Nylon hex. Nut 5/16"	1	O/L
59	Carriage bolt 5/16" NC x 1"	1	O/L
60	Nylon flatwasher 7/16"	4	658468
61	Hex. Bolt 1/4" NC x 1/2", PTD	4	O/L

ELECTRIC NOZZLE ROTATION - 9480 (OPTION)

REF.	DESCRIPTION	QTY	PART #
1	Rotation support	1	662491
2	Electric rotation shaft	1	662489
3	Electric motor	1	662455
4	Rotation worm	1	660246
5	Double wire assembly 102"	1	662468
6	Fuse 15 amp.	1	O/L
7	Wire assembly 5"	2	665441
8	Wire assembly 17"	1	655442
9	Wire assembly 18"	1	660692
10	Wire # 16 ga. X 18"	1	660323
11	Plastic bushing 1 5/16"	1	657335
12	Plastic bushing 1 11/16"	1	657336
13	Rubber toggle protector	1	658666
14	Switch	1	658778
15	Connector tap	1	656665
16	Fuse holder	1	658665
17	Hex. Bolt 1/4" NC x 1 3/4" PTD	3	O/L
18	Hex. Nut 1/4" PTD	3	O/L
19	Allen sockethead capscrew #10-24NC x 1" PTD	1	O/L
20	Nylon nut hex #10-24NC PTD	1	O/L
21	Lockwasher 1/4" PTD/	3	O/L
22	Allen setscrew 1/4" NF x 1/4"	2	O/L
23	Nylon tie wrap 8"	3	O/L
24	Spacer 1/2"	3	662458

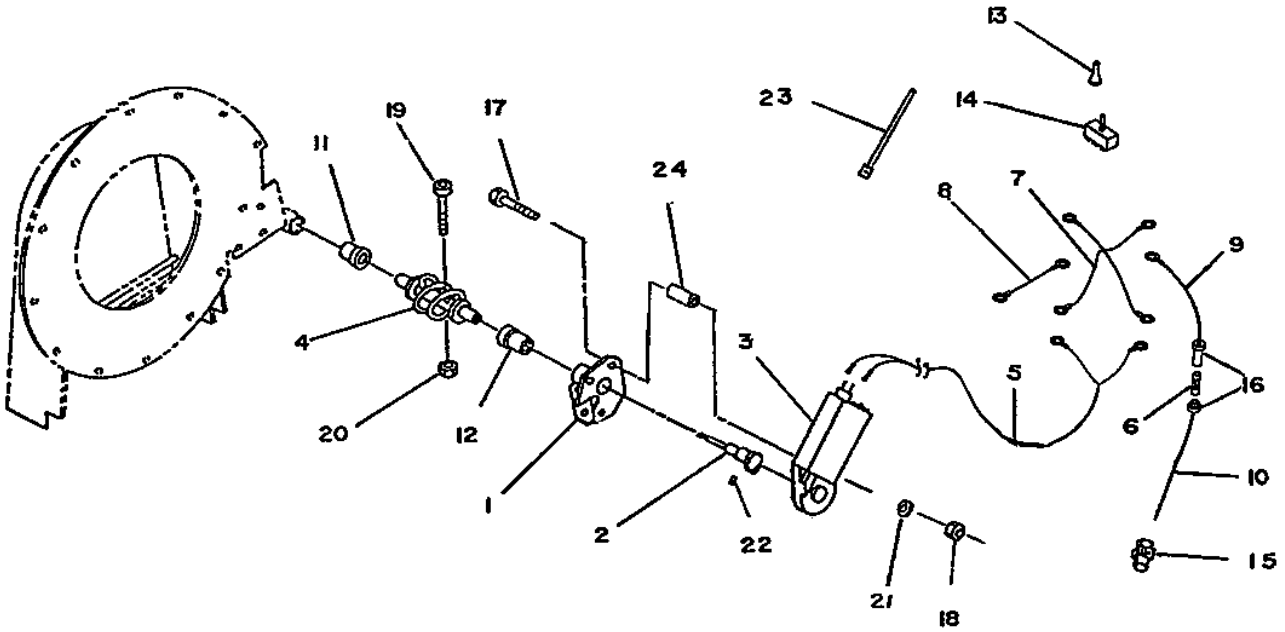

HYDRAULIC NOZZLE ROTATION KIT - 8044 (OPTION)

REF.	DESCRIPTION	QTY	PART #
1	Rotation bracket CW	1	664220
2	Rotating ring CW	1	664223
3	Retaining plate	2	664243
4	Hydraulic motor	1	3900087
	Seal kit	1	3900088
5	Hydraulic hose 1/4" x 28"	2	660324
6	Allen socket set screw 1/4" NC x 1/4"	2	O/L
7	Keysteel 1/8" x 1/8" x 1"	1	664233
8	Roller chain assembly #40	1	664235
9	Sprocket #H40B10	1	665457
10	Restrictor	2	665690
11	Hex bolt 3/8" NC x 1"; PTD	2	O/L
12	Hex bolt 1/4" NC x 1 1/4"; PTD	4	O/L
13	Hex bolt 1/4" NC x 1"; PTD	6	O/L
14	Hex bolt 1/4" NC x 5/8"; PTD	4	O/L
15	Hex nut 3/8" NC; PTD	2	O/L
16	Hex nut 1/4" NC; PTD	8	O/L
17	Stover nut 1/4" NC; PTD	2	O/L
18	Lockwasher 3/8"; PTD	2	O/L
19	Lockwasher 1/4"; PTD	8	O/L
20	Flatwasher 7/16"; PTD	4	O/L
21	Flatwasher 5/16"; PTD	2	O/L
22	Flange nut 1/4" NC PTD	4	O/L
23	Support plate	1	665464
24	Allen flathead setscrews M6 x 1.0 x 10mm	3	O/L

O/L = Obtain Locally

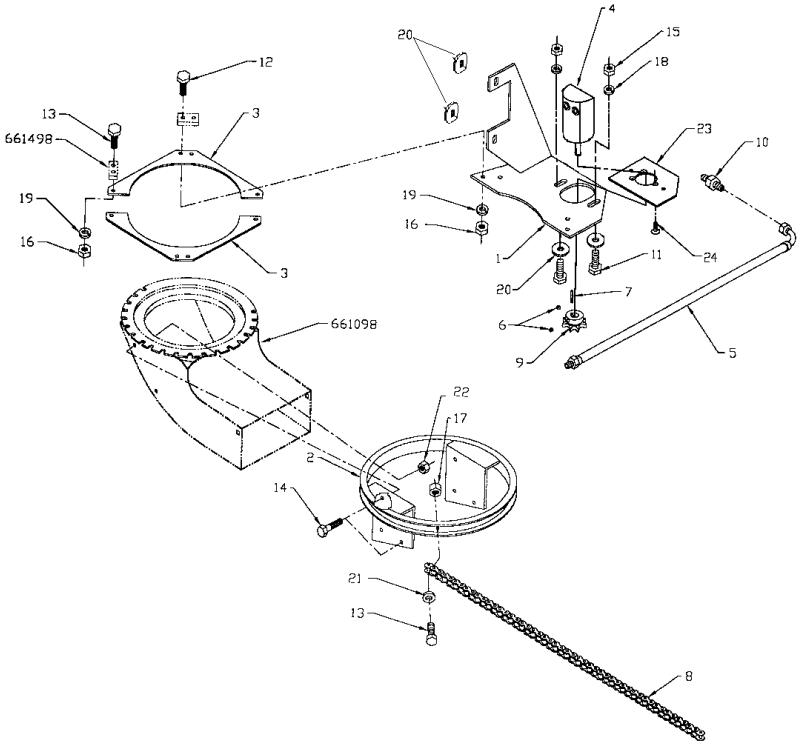

ELECTRIC DEFLECTOR – 9370 (OPTION)

REF.	DESCRIPTION	QTY	PART #
1	Support plate	1	665773
2	Spacer	2	665774
3	Actuator	1	656848
4	Shoulder screw 1/4" x 1 1/2" (10-24 NC)	2	O/L
5	Nylon hex. nut (10-24 NC)	2	O/L
6	Hex. Bolt 1/4" NC x 3/4"	2	O/L
7	Flange nut 1/4" NC	2	O/L
8	Connector tap	1	656665
9	Carriage bolt 5/16" NC x 3/4" (snowblower)	2	O/L
	Carriage bolt 5/16" NC x 3/4" (debris blower)	1	O/L
10	Nylon nut 5/16" NC (snowblower)	2	O/L
	Nylon nut 5/16" NC (debris blower)	1	O/L
11	Stopper sleeve	1	661102
12	Connector	2	656664
13	Double wire ass'y 102"	1	660695
14	Connector female	2	657853
15	Connector male	2	655217
16	Wire ass'y 5"	2	655441
17	Wire ass'y 17"	1	655442
18	Control switch	1	658778
19	Rubber toggle protector	1	658666
20	Wire ass'y 18"	1	660692
21	Fuse holder	1	658665
22	Fuse 6 amp.	1	657285
23	Wire 16 ga x 18"	1	660323
24	Flatwasher 3/16"	1	O/L
25	Flatwasher 1/4"	1	O/L

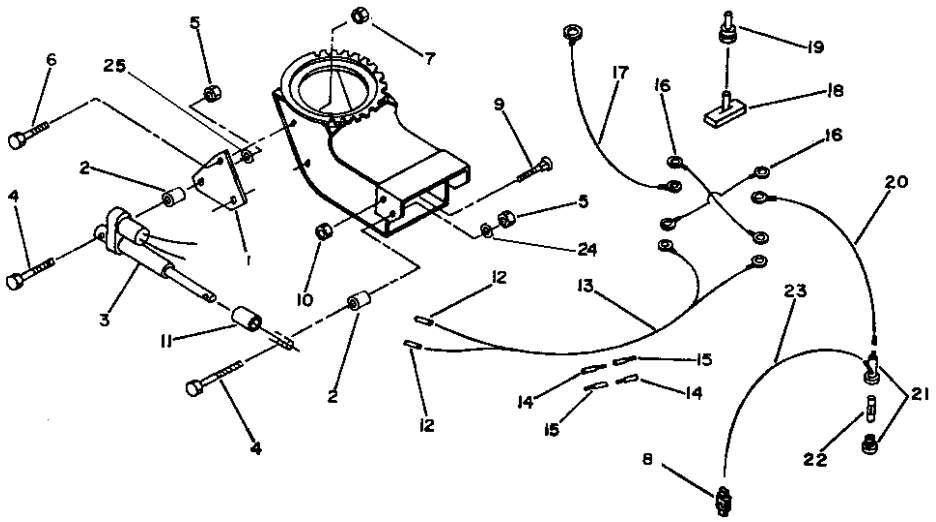

MANUAL NOZZLE ROTATION SYSTEM – 9484 (OPTION)

REF.	DESCRIPTION	QTY.	PART #
1	Plastic bushing 1 5/16"	1	657335
2	Rotation worm	1	661283
3	Plastic bushing 1 11/16"	1	657336
4	Allen setscrew 10-24NC x 1"	2	O/L
5	Nylon insert locknut 10-24NC	2	O/L
6	Rotation bracket	1	661508
7	Rotation yoke	1	659595
8	Universal block	1	658193
9	Rotation tube	1	660188
10	Spring pin 1/4" x 1 1/4"	2	O/L
11	Plastic grommet	1	657390
12	Rotation handle	1	658252
13	Handle grip	1	656797
14	Handle support	1	661721
15	Bolt hex. 5/16" NC x 1"	2	O/L
16	Lockwasher 5/16"	2	O/L
17	Nut hex. 5/16" NC	2	O/L

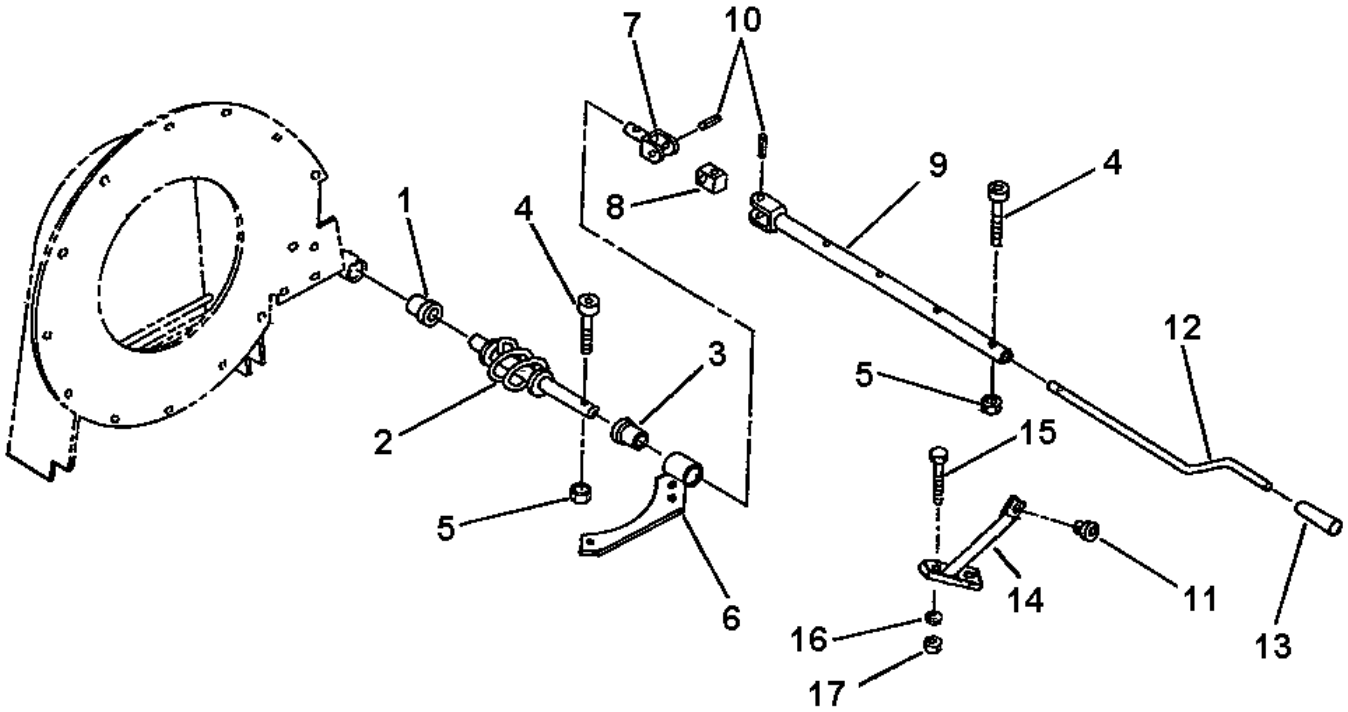

GEAR BOX (664533)

REF.	DESCRIPTION	QTY.	PART #
1	Pinion shaft	1	661088
2	Bearing	3	661091
3	Spacer	1	661089
4	Bolt M10 x 18	6	----
5	Oil filler plug 3/8"	1	656662
6	Gear	1	661087
7	Plug 3/8"gas	2	661265
8	Shaft	1	661086
9	Oil seal	2	659845
10	Snap ring	2	656654
11	Parallel key	1	661092
12	Bearing	1	661090

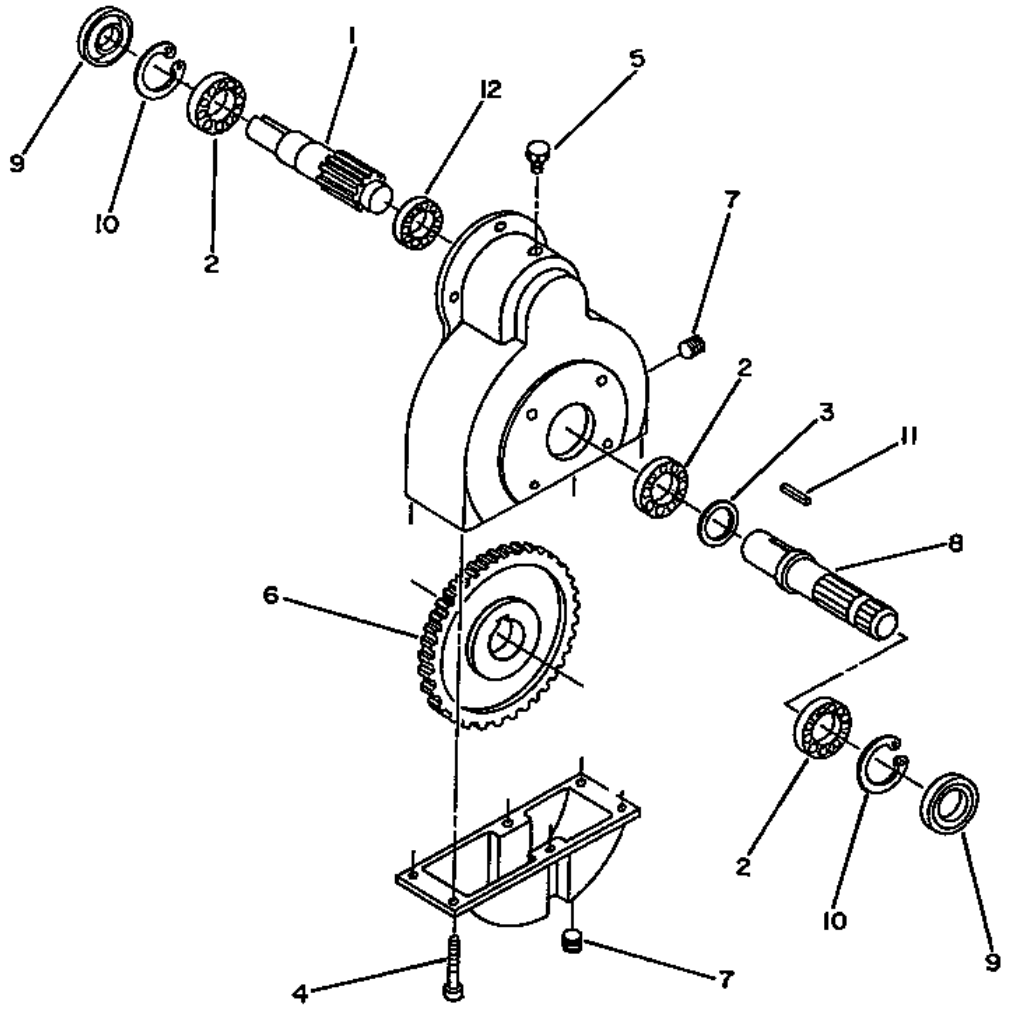

DRIVELINE (661169)

REF.	DESCRIPTION	QTY	PART #
1	Slide collar yoke	2	660764
2	Universal joint kit	2	660765
3	Outer tube yoke	1	663189
4	Inner tube yoke	1	663193
5	Shields with safety chain	1	660769

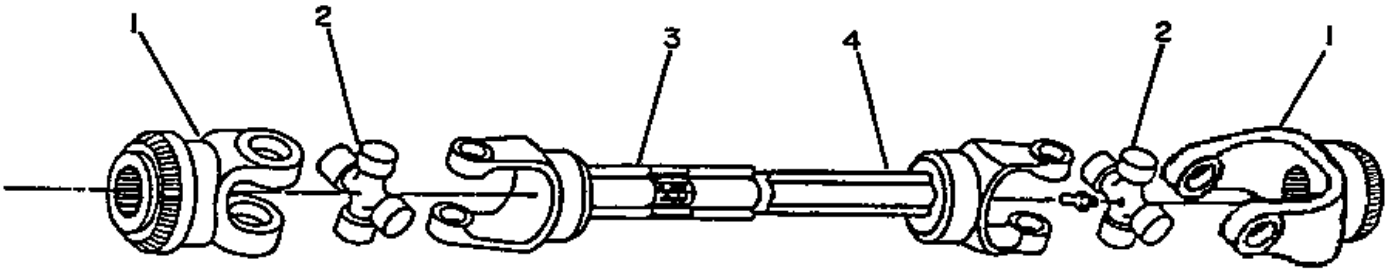

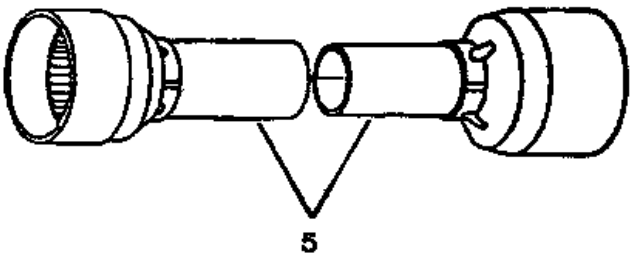

DRIVELINE LENGTH ADJUSTMENT INSTRUCTIONS

Determine the “L” length for your tractor model: Measure horizontally the distance between the tractor drive shaft end and the debris driven shaft end. Subtract 4 1/2" to that measure.

L = X – 4 1/2"

Hold the two half-shaft side by side and locate the "L" length between the two center-to-center half-shaft universal joints. Mark off the zone to be cut on both halves opposite each half-shaft guard

Cut off inner and outer guard tubes.

Shorten inner and outer telescopic sections to same extent as guard tubes.

File down tubes and remove chips.

Apply grease to inside of outer telescopic section.

IMPORTANT: Work with fully guarded shafts only!

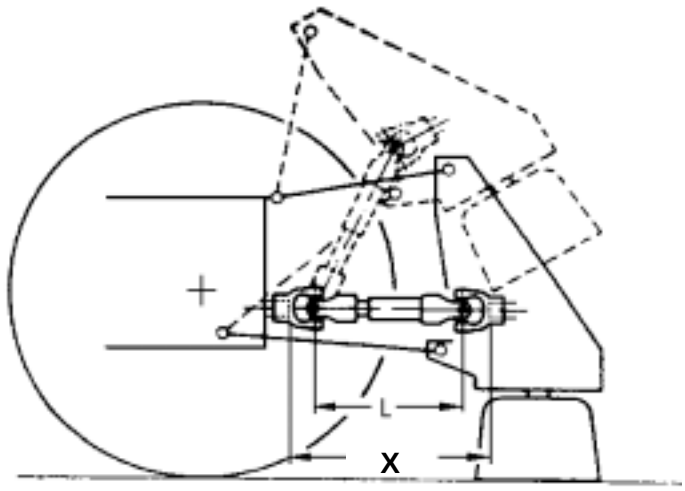

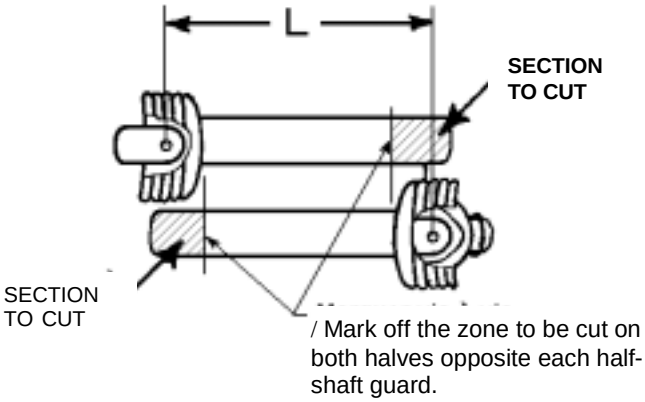

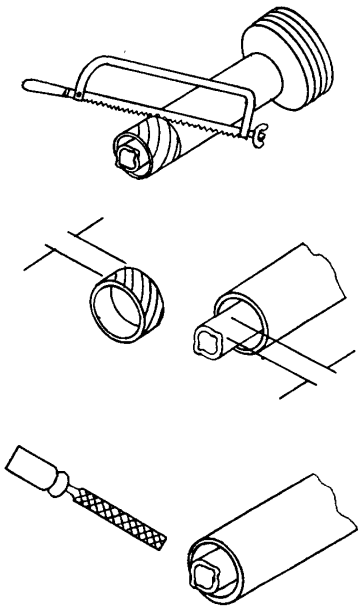

RAD TECHNOLOGIES INC.

RAD TECHNOLOGIES INC. warrants to the original buyer that the equipment is free from defects in material and workmanship. RAD TECHNOLOGIES INC.'s obligation, under this warranty, will be limited to the repair or replacement of any non-wear part or component, which RAD TECHNOLOGIES INC. finds to be defective within **one year** from the date of original purchase (unless otherwise-specified). The applicable warranty period for commercial or rental use shall be ninety (90) days from the date of purchase

In no event shall RAD TECHNOLOGIES INC. be liable for consequential, special, direct or indirect damages incurred by the buyer/user.

All components not manufactured by RAD TECHNOLOGIES INC. (such as motors, actuators, hydraulic components, tires, ...etc.) are covered by the original manufacturer's warranty in conjunction with RAD TECHNOLOGIES INC.

RAD's obligation under this warranty shall be limited to repairing or replacing, free of charge to the original purchaser, any part that, in RAD's judgment, shall show evidence of such defect, provided the **distributor** returns the part prepaid within thirty (30) days from date of failure.

This warranty shall not be interpreted to render RAD TECHNOLOGIES INC. liable for injuries or damages of any kind or nature to person or property. This warranty does not extend to losses because of delays, or to any expenses or losses incurred for labor, substitute machinery, rental or for any other reason.

Except as set forth above, RAD TECHNOLOGIES INC. shall have no obligation or liability of any kind on account of any of its equipment and shall not be liable for special or consequential damages. RAD TECHNOLOGIES INC. makes no other warranty, expressed or implied, and specifically, RAD TECHNOLOGIES INC. disclaims any implied warranty or merchantability or fitness for a particular purpose**. Some states or provinces do not permit limitations or exclusions of implied warranties or incidental or consequential damages, so the limitations or exclusions in this warranty may not apply.**

This warranty is subject to any existing conditions of supply, which may directly affect our ability to obtain materials or manufacture replacement parts. RAD TECHNOLOGIES INC. reserves the right to make improvements in design or changes in specifications at any time, without incurring any obligation to owners of units previously sold.

No one is authorized to alter, modify or enlarge this warranty nor the exclusions, limitations and reservations.

2835 Chemin de l'Aéroport, Thetford Mines (Québec) G6G 5R7
Tél.: (418) 338-4499 Fax: (418) 388-6090
Internet: www.radinter.com EMAIL: radtech@radinter.com

TORQUE SPECIFICATION TABLE

GENERAL SPECIFICATION TABLE Use the following torques when special torques are not given Note: These values apply to fasteners as received from supplier, when dry. These values do not apply if lubricants are used.		
BOLT SIZES (SAE)	**TORQUE**	
INCHES	**Pounds-Foot**	**Newtons-Meter**
1/4	5	7
5/16	10	14
3/8	20	27
7/16	25	41
1/2	88	119
9/16	121	164
5/8	165	224
3/4	297	403
7/8	440	597
1	638	865
1 1/8	840	1139
1 1/4	1180	1600
1 3/8	1570	2129
1 1/2	2070	2807

BOLT SIZES (METRIC)	**TORQUE**	
MILLIMETERS	**Pounds-Foot**	**Newtons-Meter**
M6	10	13
M8	22	30
M10	40	54
M12	59	80
M14	93	126
M16	130	176
M18	168	228
M20	205	278

Manufactured by:

RAD Technologies Inc.
2835, Chemin de l'Aéroport
Thetford Mines, Québec, Canada, G6G 5R7
Tel.: (418) 338-4499 - Fax.: (418) 338-6090
E-mail : radtech@radinter.com
Internet : www.radinter.com

Printed in Canada